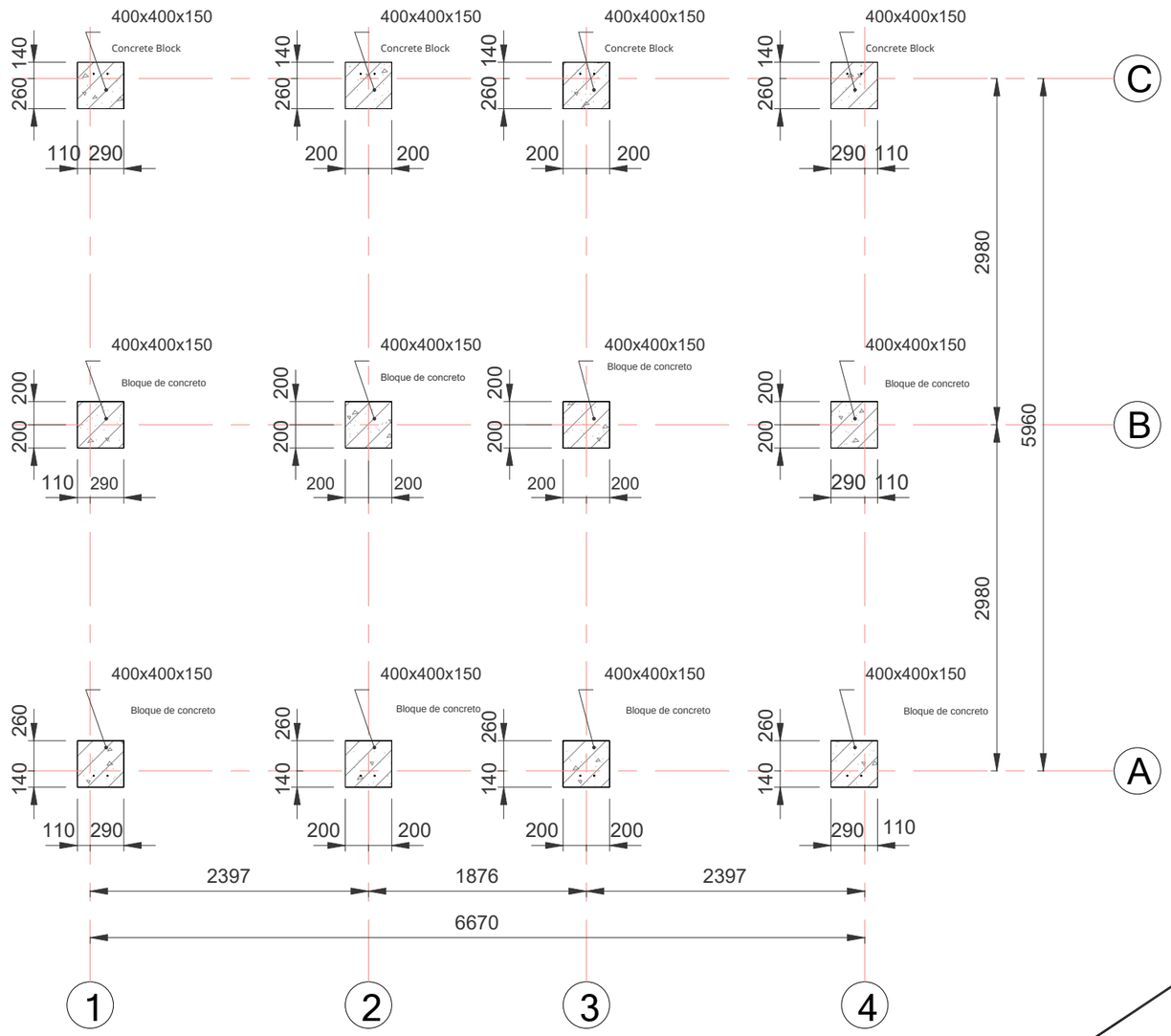


L20 Posicionamiento del plano de bloques de concreto

Antes de la construcción, el terreno debe estar nivelado, sin pendientes.

Seleccione bloques de hormigón que se adapten a la calidad del suelo en función del tipo de suelo del terreno.

Y el equipo correspondiente. El área de instalación de la casa de montaje rápido, de acuerdo con [Posicionamiento del plano de bloques de hormigón], utilice

Marcas y diseños in situ.

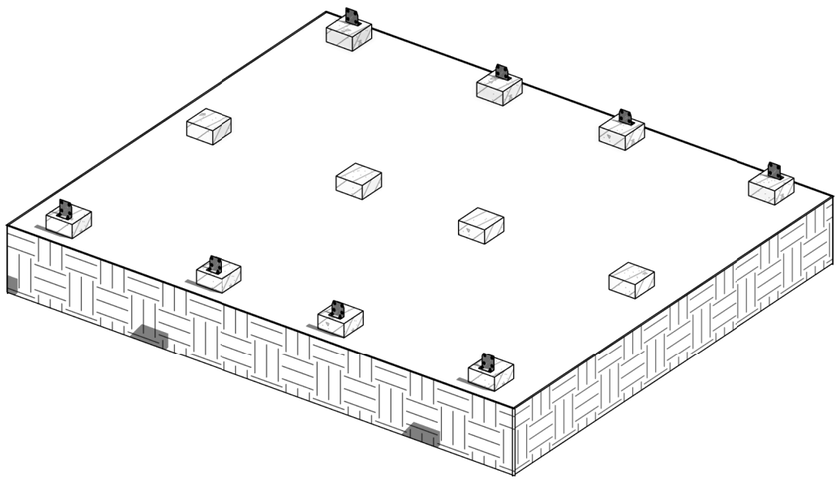

Diagrama

Pasos con base en los puntos de posicionamiento de los bloques de concreto, utilice maquinaria especializada para instalar el concreto.

Bloques. La instalación de bloques de hormigón debe completarse con un nivel superior de 15 cm y no más alto que

El suelo

| Rev. | Description | Date | Publisher |
|---|---|---|---|
| | | Date | who send |

ZINCASUR
FORMADORA DE CUBIERTAS

Certificate Level

Certificate Number

Cooperative Design Unit
Cooperative Designer

| Process | Signature | Date |
|---|---|---|
| Approval Authorized By | | |
| Review Verified By | | |
| Project Leader Process | | |
| Proofreader Checked By | | |
| Design Designed By | | 01/08/24 |
| Drafting Drawn By | | |

Professional Seal
Engineer Signature

Drawing Seal
Engineer Signature

Project Name
Project Name

SPD-L20 Foundation Model

Drawing Name
Title

Foundation Plan

| Project Number Title | | Major Title | JZ |
|---|---|---|---|
| Scale Scale | | Drawing No Dwg.No | J0-01 |

Unstamped Technical Drawings are Invalid

This drawing is valid only after being stamped and released by the R&D

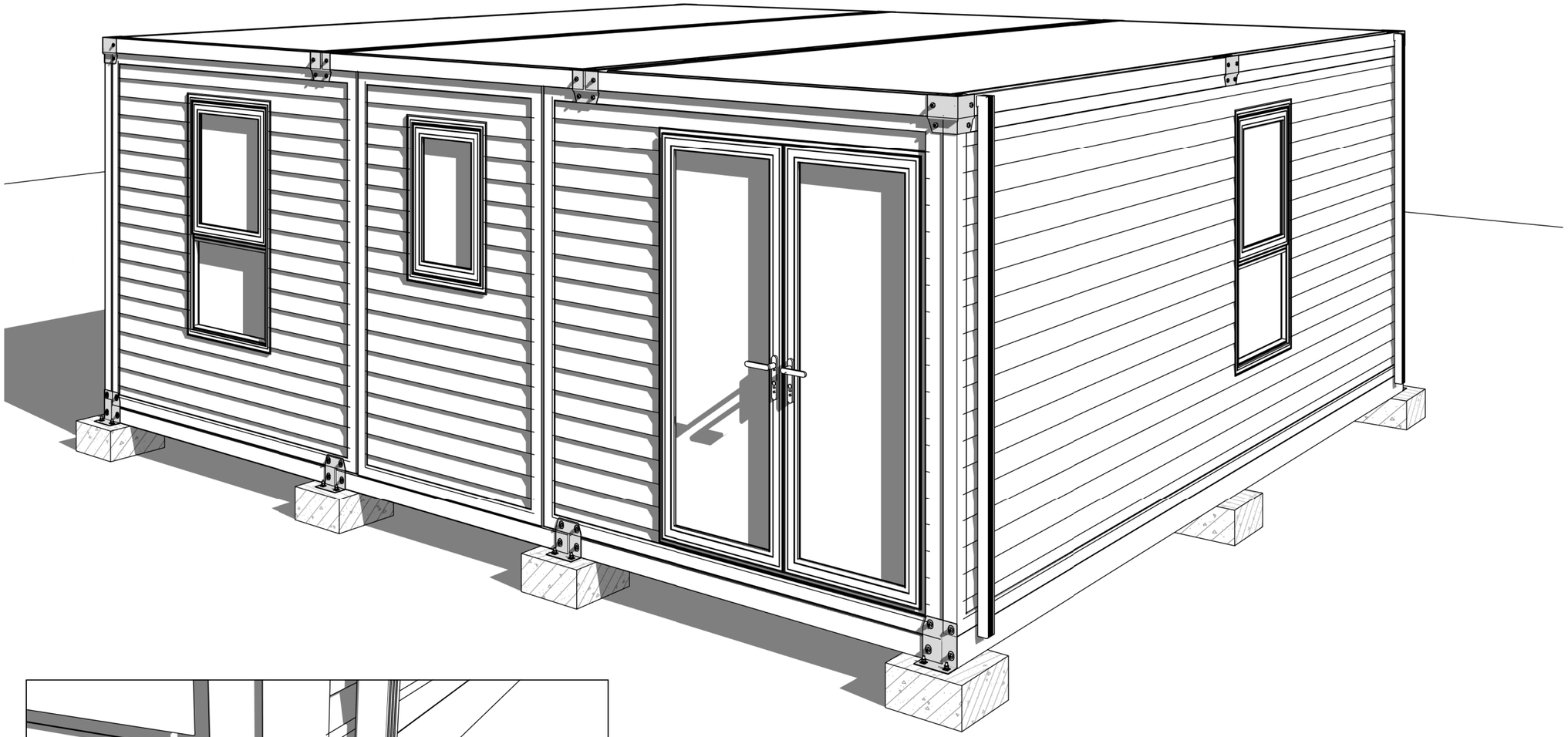

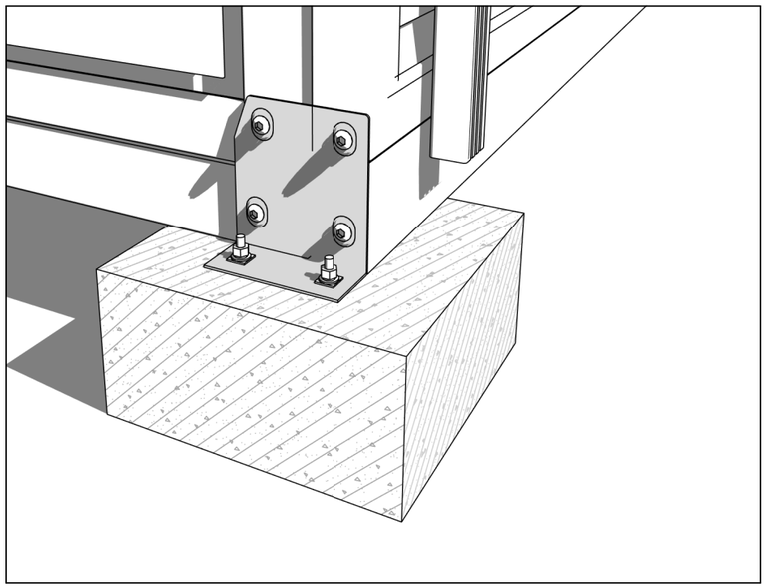

Copyright 2016.

The copyright of this drawing belongs to Zhejiang Putian Integrated Housing Co., Ltd. Any other use and reproduction of this drawing, except for this project, must obtain written permission from this company.

THE OWNERSHIP OF THE COPYRIGHT IN THIS DRAWING ISRETAINED BY ZHEJIANG PUTIAN INTEGRATED HOUSING CO.LTD. WRITTEN CONSENT MUST BE OBTAINED BEFORE ANY USE OR REPRODUCTION OF THE DRAWING.

| Version Rev. | Modification Content Description | Date Date | Publisher who send |
|---|---|---|---|

ZINCASUR
FORMADORA DE CUBIERTAS

Zhejiang Putian integrated housing Co., ltd.

Hangzhou Zhongpu Architecture Design (institute)Co., ltd.

| | |
|---|---|
| Certificate Level | |
| Certificate Number | |

Cooperative Design Unit
Cooperative Designer

| Process Process | Signature Signature | Date Date |
|---|---|---|
| Approval Authorized By | | |
| Review Verified By | | |
| Project Leader Process | | |
| Proof-reader Checked By | | |
| Design Designed By | | 03/26/24 |
| Drafting Drawn By | | |

Professional Seal
Engineer Signature

Drawing Seal
Engineer Signature

Project Name
Project Name

SPD-L20 Foundation Model

Drawing Name
Title

Connection Plate Installation

| | | | |
|---|---|---|---|
| Project Number Title | | Major Title | JZ |
| Scale Scale | | Drawing No. Dwg.No | J0-02 |

This drawing is valid only after being stamped and released by the R&D

Drainage